THIS DRAWING IS UNPUBLISHED. RELEASED FOR PUBLICATION -,- .
© COPYRIGHT – TE Connectivity Ltd. ALL RIGHTS RESERVED.

REVISIONS					
P	LTR	DESCRIPTION	DATE	DWN	APVD
	AH2	REVISED PER ECO-17-013369	14MAR2018	J.Z	D.Z

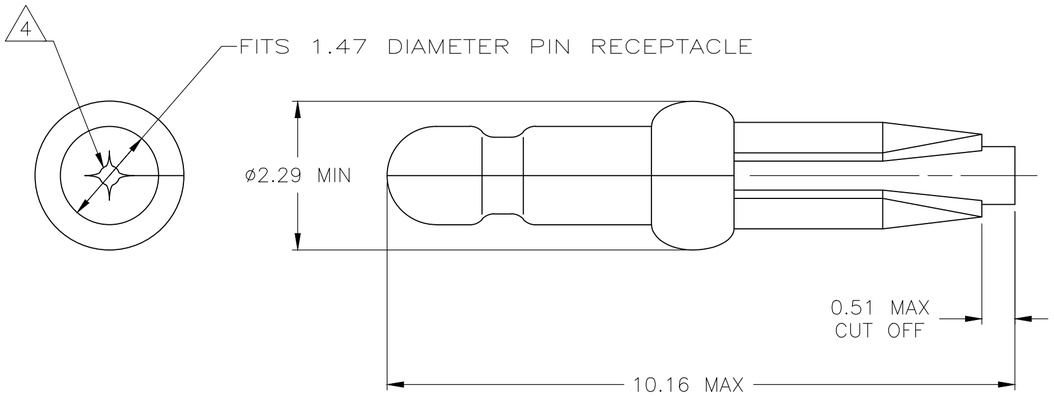

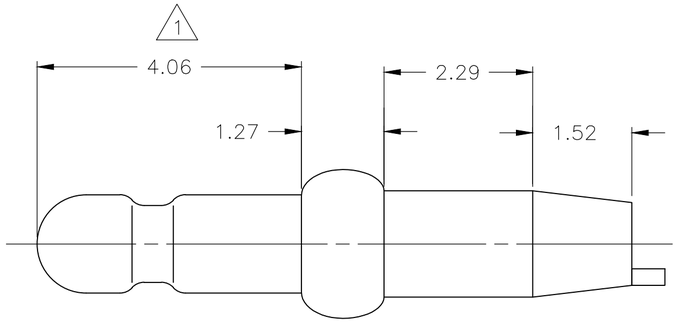

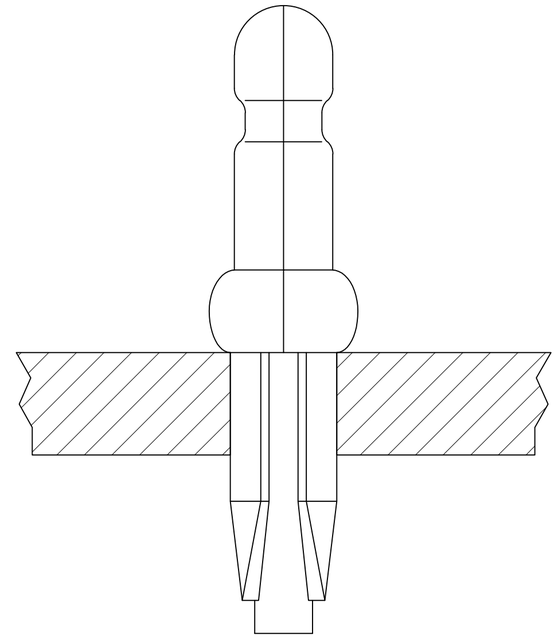

1. 0.00076 MIN GOLD PLATING IN THIS AREA WITH 0.00381 MIN MATTE TIN LEAD ON THE REMAINDER, BOTH OVER 0.00127 MIN NICKEL UNDERPLATE.
2. FITS 1.47 – 1.57 DIAMETER HOLE IN A 1.57 OR 2.36 PRINTED CIRCUIT BOARD.
3. PARTS TO COMPLY WITH AMP SOLDERABILITY SPECIFICATION 109-11-3.
4. 0.05 – 0.25 DIAMETER OPENING REQUIRED IN TIP OF PIN.
5. APPLICATOR FEED: 8.00 – 8.26
6. 0.00076 MIN GOLD PLATING IN THIS AREA WITH 0.00381 MIN TIN ON THE REMAINDER, BOTH OVER 0.00127 MIN NICKEL UNDERPLATE.

0.13	.005	1.52	.060	8.00	.315	–	–
0.05	.002	1.47	.058	4.06	.160	–	–
0.00381	.000150	1.27	.050	2.36	.093	–	–
0.00127	.000050	0.51	.020	2.29	.090	10.16	.400
0.00076	.000030	0.25	.010	1.57	.062	8.26	.325
MM	IN	MM	IN	MM	IN	MM	IN

CONVERSION TABLE

METRIC

OBSOLETE	6	3-60874-2
	1	~~60874-2~~
PRE TIN		60874-1
FINISH		PART NUMBER

THIS DRAWING IS A CONTROLLED DOCUMENT.

DIMENSIONS: mm

TOLERANCES UNLESS OTHERWISE SPECIFIED:
0 PLC ± –
1 PLC ± –
2 PLC ± 0.13
3 PLC ± –
4 PLC ± –
ANGLES ± –

MATERIAL: 0.25 PH BRZ

FINISH: SEE TABLE

DWN T. BECK 8-20-97
CHK R. SWING 8-20-97
APVD A. BEDDICK 9-10-97
PRODUCT SPEC 108-1025
APPLICATION SPEC 114-1008
WEIGHT 0.000000

TE Connectivity Ltd.

NAME: PIN, .058 DIAMETER, PHOSPHER BRONZE, PRESS FIT, LOOSE PIECE, P.C. CONTACT

SIZE	CAGE CODE	DRAWING NO	RESTRICTED TO
A2	00779	C-60874	–

CUSTOMER DRAWING | SCALE 15:1 | SHEET 1 OF 1 | REV AH2

60874

1471-9 (1/15)